Report 9, 1993

CONTROL SYSTEM FOR GEOTHERMAL HOUSE HEATING

Li Youji,
UNU Geothermal Training Programme,
Orkustofnun - National Energy Authority,
Grensasvegur 9,
108 Reykjavik,
ICELAND

Permanent address:
16 Yingkou Street,
Geothermal Office of Tanggu,
Tanggu, Tianjin,
P.R. CHINA

ABSTRACT

A control system for geothermal house heating is a key item to utilize geothermal energy efficiently and to achieve comfortable indoor conditions during cold seasons. Some modern control equipment which has been widely used in geothermal house heating systems is introduced, including construction, operating principles, function and application. The different geothermal house heating connections are finally introduced. All the control equipment which is presented in this report has been widely used in the geothermal district heating system of Reykjavik, the capital city of Iceland, the best known geothermal district heating system in the world. The geothermal house heating connections which are presented in this report are typical for Reykjavik. They have achieved the objective of using geothermal energy efficiently and obtaining comfortable indoor conditions due to the utilization of this control equipment.

TABLE OF CONTENTS

LIST OF FIGURES

LIST OF TABLES

1. INTRODUCTION

The author of this report was awarded a United Nations University (UNU) Fellowship to attend the 1993 Geothermal Training Programme held at the National Energy Authority (Orkustofnun) of Iceland, lasting from April to October 1993. The first five weeks of the training were used for an intensive lecture course on all main aspects of geothermal energy exploration and utilization, also, all fourteen UNU Fellow were taken on practical and short field excursions.

The second stage of the training took place during the next seven weeks. A series of specialized seminars were instructed for different trainees. For the engineering trainee group, the courses included heating systems, heat exchangers, heat pumps, control systems, deep well pumps, geothermal industrial utilization, fluid chemistry, utilization etc. Several geothermal field trips took place in this stage.

Next on the programme was a field excursion with seminars during July 19 to July 28. The main geothermal fields of Iceland and sites of geothermal utilization were visited. At the same time, seminars were presented concerning geological and geophysical exploration, utilization and the stages of development of the visited geothermal fields or geothermal utilization projects.

The last stage of the training was a specialized project selected by the trainees. In this period, the trainee worked with a supervisor, a professional in the field of the selected specialized study. The author of this report was interested in control systems for geothermal house heating as it relates to the geothermal utilization situation in the author's hometown.

A part of what should be considered in geothermal application of district heating is to reduce the consumption of geothermal fluid as much as possible in order to utilize the limited geothermal reservoir longer. Therefore, the utilized temperature of geothermal fluid should be increased as much as possible. At the same time it is desirable to get more comfortable indoor temperature in houses heated by geothermal heating systems during heating season. For the above mentioned reasons, control systems have been utilized widely for geothermal heating systems. This report deals with the subject of control systems for geothermal house heating. At first, some main control equipment which has been widely used in geothermal house heating is introduced. For example, the radiator thermostats are used to maintain constant indoor temperature. The radiator thermostats can be pre-set for maximum flow during the worst weather conditions and can be adjusted for required indoor temperature during normal weather conditions. The temperature controlled valve AVTB is used for adjusting the required constant temperature in heat exchangers, it will close while temperature rises. Temperature and pressure controlled valve AVTQ is used to put geothermal supply water through heat exchangers for domestic hot tap water while hot water is tapped. The pressure controlled valve AVD is used for keeping stable pressure between supply and return geothermal water pipes etc. We can achieve the objectives of using geothermal energy efficiently and getting comfortable indoor conditions because of the control equipment mentioned above. Finally, some typical geothermal house heating connections, using some of the control equipment mentioned above are introduced in this report.

2. GEOTHERMAL DISTRICT HEATING

2.1 General

Geothermal energy utilization technology has been significantly developed in the last two decades. At present, geothermal energy is widely used. High temperature geothermal steam is typically used for electricity generation. Low enthalpy geothermal fluid temperature in the range 100°C to 150°C is used for generation of electricity in a binary plant, sometimes combined with heating application. Low temperature geothermal water is mainly used for space heating. Geothermal energy is also used in industry, e.g. pulp and paper mills, diatomite plants, vegetable and fruit dehydration, crop drying, lumber drying etc., greenhouse heating, space cooling and aquaculture.

Geothermal district heating is operated with relatively low temperatures, ranging from 60°C to 125°C. The hot water flowing through the users' radiators is either piped directly from geothermal wells or from heat exchangers, depending on the contents of various dissolved chemicals and minerals which cause corrosion or scaling in the heating system. So far, over twenty countries are using geothermal water for district heating and some are increasing the use rapidly. The best known of the geothermal district heating systems, however, is the hot water supply system of Reykjavik, the capital city of Iceland. Geothermal district systems are becoming commonplace in Iceland (Karlsson, 1982) and by now (August 1993) it is estimated that over 85% of the Icelandic population enjoy geothermal heat in their homes. In the author's home town, Tanggu, Tianjin, P.R. of China, around one hundred and thirty thousand people are using geothermal water for space heating and hot tap water supply.

2.2 Types of district heating systems

Geothermal district heating systems may be classified into two main types, i.e. primary systems and secondary systems. The difference depends on whether heat exchangers are used in the system or not. The primary system uses heat exchangers and the geothermal water is used indirectly. The secondary system uses the geothermal water directly. They are depicted in Table 1 and brief diagrams are shown in Figure 1 (Eliasson et al., 1990).

Some of the geothermal heating systems are connected with fossil-fuelled boilers to meet a peak demand in heat. It is more economical to install the peak station for short periods of peak heat demand than to provide geothermal capacity sufficient for all load situations.

2.3 Comparison with conventional district heating systems

Conventional heating systems use fossil fuel as heating resource which can not be reused, resulting in large scale consumption of fossil fuel. Geothermal district heating nearly eliminates the consumption of conventional energy resources, i.e. oil, coal, or natural gas, although it may be advantageous to use conventional fuels for peak demand of geothermal heating.

Generally, geothermal district heating systems offer thermal energy at a lower price than conventional heating systems. The initial investment cost for production and injection wells, downhole and circulation pumps etc. however, is higher than conventional heating systems at the same heating load, but operating and system maintenance expenses are lower.

TABLE 1: Types of geothermal district heating systems

1.	**Primary system or indirect use:** In this case, the geothermal water is separated from the district heating water by heat exchanger, either because of high content of dissolved chemicals or minerals that form corrosion or scaling, or high temperature and pressure geothermal fluid can not be used directly.
System A	In this system, the geothermal water is piped through a heat exchanger which transfers the heat from the geothermal water to the heating system medium (water). The geothermal water temperature is cooled from 80°C to 45°C. The used fluid is discharged as waste.
System B	A heat pump is used to extract lower temperature geothermal energy and to boost the medium's temperature of the heating system.
System C	Two heat exchangers are installed, the first one for the heating system and the second one for hot tap water.
2.	**Secondary system or direct use:** The geothermal fluid is pure enough to be used directly, i.e. lower content of dissolved minerals and chemicals.
System D	Single pipe system. This system uses the geothermal fluid directly. The used fluid is discharged as waste.
System E	Double pipe system. Some return water is mixed with the geothermal supply water (100 to 130°C) to keep a constant supply temperature (e.g. 80°C).
System F	A heat pump is employed to boost the thermal energy from lower temperature geothermal fluid.
System G	A heat pump is used. The heated water is mixed with geothermal supply water.

Utilization of geothermal energy for district heating can improve air quality, because no combustion occurs nor noxious gases and particles. This point is the most significant advantage for geothermal heating compared with conventional heating that pollutes the air.

Geothermal heating systems can be operated more safely than conventional heating systems. Some accidents may be reduced or avoided.

One of the disadvantages concerning geothermal heating systems is that the technology is complicated because of dissolved solids or gases in the fluid. The conventional heating (e.g. boiler central heating) technology is more advanced than geothermal heating technology.

The heating efficiency of low temperature geothermal fluids, especially below 70°C, is lower than conventional heating systems. Some special boost heating equipment, larger radiators and some control equipment are required, bringing the initial investment cost higher than conventional heating systems as mentioned above.

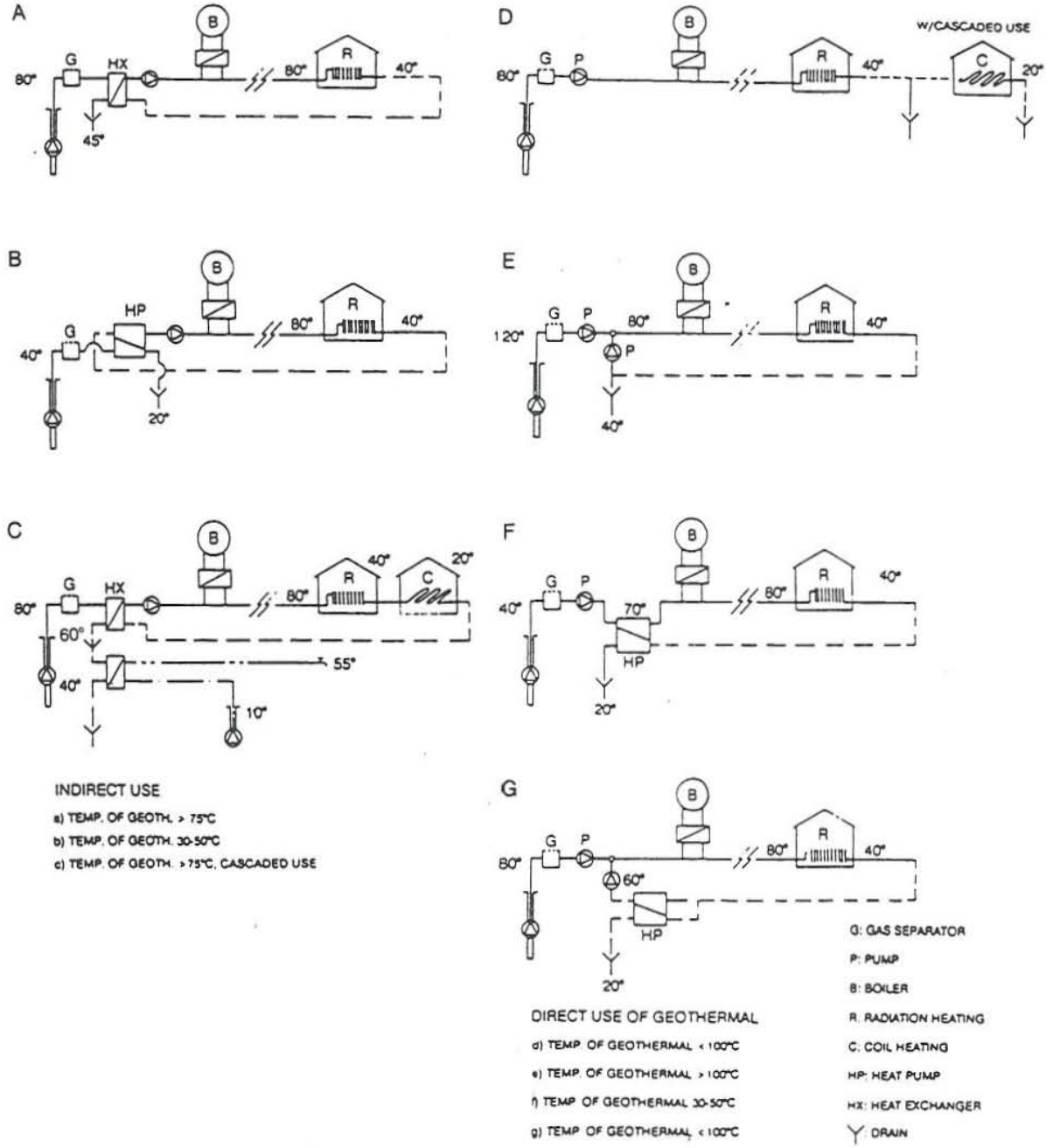

FIGURE 1: Types of geothermal district heating systems (Eliasson et al., 1990)

3. APPLICATION OF RADIATOR THERMOSTATS

3.1 General

The basic requirements of geothermal heating systems are that the radiators heat output must be high enough to satisfy the demands of the users and the temperature of the water at the outlets must be as low as possible. The requirements can be partly carried out by applying radiator thermostats. By using the radiator thermostats, we can enhance the heating efficiency of a heating system and get comfortable room temperature. The task of the radiator thermostats is to regulate the heat supply to the room, in relation to the desired, normal, or economic indoor temperature. At the same time, the valves take into account the free heat supplied to the room from sunshine, electrical apparatus, body heat etc. The valves use the heat source to the optimum and maintain constant temperature selected by the user. Moreover the radiator thermostat protects the heating system against frost damages at low temperature conditions.

3.2 Construction and operating principle

The radiator thermostatic valve consists of a thermostatic element and a valve body. It is illustrated in Figure 2. The element operates with a thermostatic sensor, a vapour-bellows system. When the indoor temperature rises, the vapour will be heated and the vapour pressure in the bellows increased. The bellows expands and moves the valve cone towards the valve seat. The valve shuts off hot water flow to the radiator. When the room temperature falls the bellows becomes cooler so that the vapour pressure falls. The bellows pulls in and moves the valve cone away from the valve seat. The valve opens and turns on hot water flow through the radiator.

The thermostatic sensor (Figure 3) uses a saturated vapour charge. Saturated vapour pressure over a liquid surface is dependent upon the temperature at the liquid surface. The different temperature causes the pressure change. It produces pressure variation within a closed circuit. This force is balanced by a spring. The vapour pressure variations are converted into controlled axial movements which can then actuate a valve spindle.

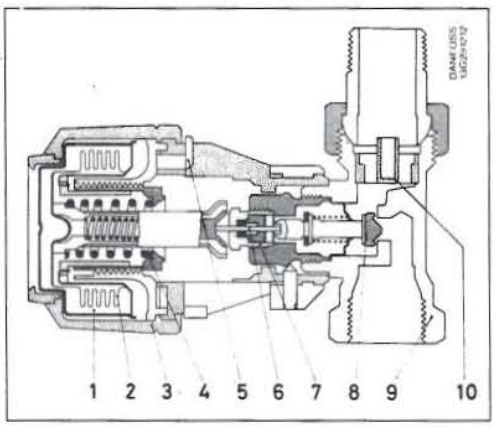

1. Thermostatic element
2. Bellows
3. Setting dial
4. Setting spring
5. Limit pin
6. Pressure pin
7. O-ring seal
8. Valve cone
9. Valve body
10. Nozzle

FIGURE 2: Construction of a radiator thermostat (Danfoss)

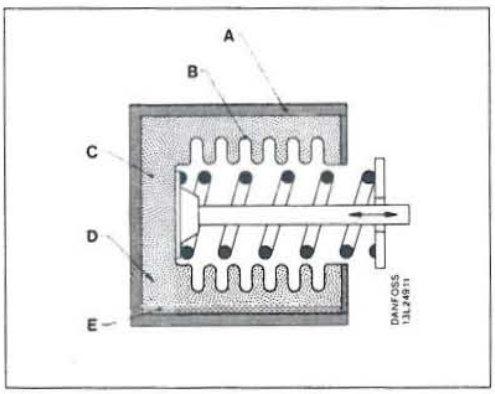

A: Bellows capsule
B: Bellows
C: Saturated vapour
D: Liquid surface
E: Liquid

FIGURE 3: Radiator thermostat's sensor (Danfoss)

3.3 Types of radiator thermostats

Here, some of the RA 2000 series radiator thermostat valve bodies are introduced. RA-N, RA-U and RA-UR, for example, are that widely used for geothermal heating systems and conventional heating systems. The different valve bodies and elements form the radiator thermostats. The appearances of the three types of valve bodies and typical elements are shown in Figure 4.

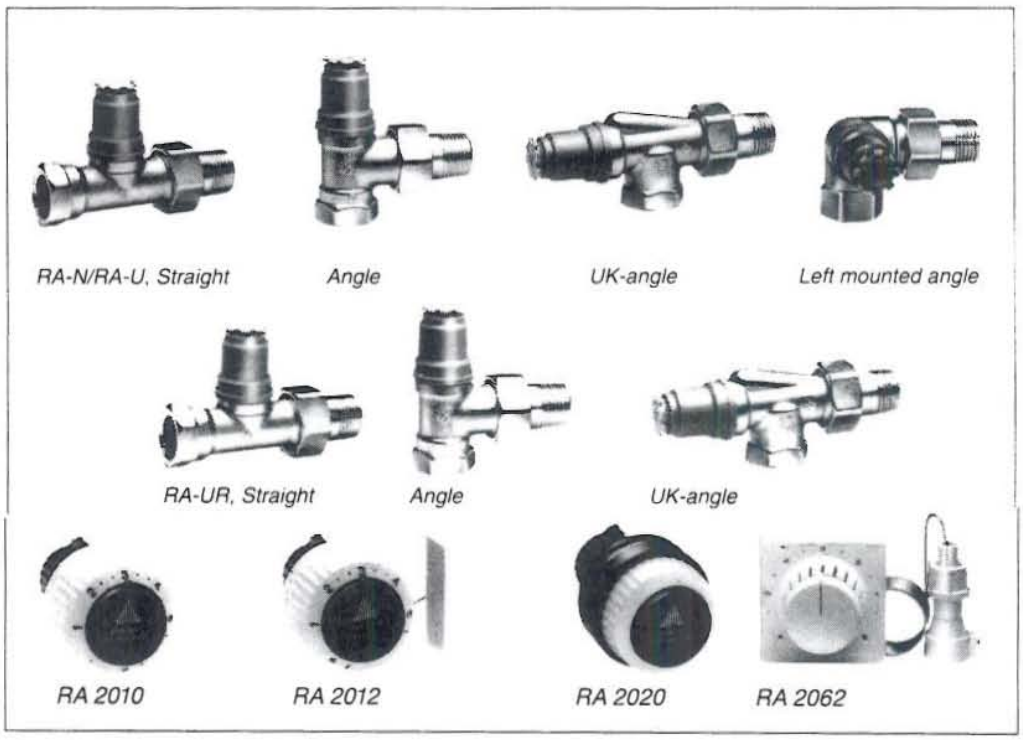

FIGURE 4: The appearance of the radiator thermostat's valve bodies and typical elements (Danfoss)

The difference between these valve bodies lies in the different k_v-value. The k_v-value indicates the water flow (Q) in m^3/h at a pressure drop (Δp) of 1 bar across the valve.

$$k_v = \frac{Q}{\sqrt{\Delta p}}$$

where

Q - flow rate through the valve (m^3/h)
Δp - pressure drop across the valve (bar)

The valve body RA-N, which is mainly used in the double pipe heating system, has a higher k_v-value than RA-U and RA-UR. The valve bodies RA-U and RA-UR are especially used in economic heating systems, where high temperature difference between flow and return is needed and very small water quantities are required. This is particularly beneficial for geothermal heating systems because the geothermal water consumption should be limited in order to decrease the geothermal water level draw down. The valve body RA-UR is mounted on the return of the radiator. Table 2 shows the data and ordering of these valve bodies:

TABLE 2: The data and ordering of the radiator thermostat's valve bodies (Danfoss)

Type	Code nr.	Design	Connections		Pre-setting									Max. Pressure			Max. working temp.
			In-let	Out-let	k_v-max. [1] (m^3/h at Δp = 1 bar)								k_{vs}	Wor-king	Diff. (Δp)	Test	
			R_p	R	1	2	3	4	5	6	7	N	N	bar	bar [2]	bar	°C
RA-U 10	013G3261 013G3262 013G3251	L = L (UK)	3/8	3/8													
RA-U 15	013G3263 013G3264 013G3253	L = L (UK)	1/2	1/2	0,02	0,04	0,07	0,12	0,19	0,27	0,33	0,48	0,57	10	1.0	16	120
RA-U 20	013G3265 013G3266	L =	3/4	3/4													
RA-UR 10[3]	013G3299 013G3298 013G3297	L = L (UK)	3/8	3/8	0,02	0,06	0,05	0,08	0,14	0,20	0,27	0,47	0,53				
RA-N 10	013G0031 013G0032 013G0151 013G0231 013G0232	L = L (UK) L-right L-left	3/8	3/8	0,04	0,08	0,12	0,19	0,25	0,33	0,38	0,56	0,65				
RA-N 15	013G0033 013G0034 013G0153 013G0233 013G0234	L = L (UK) L-right L-left	1/2	1/2	0,04	0,08	0,12	0,20	0,30	0,40	0,51	0,73	0,90	10	0.6	16	120
RA-N 20	013G0035 013G0036	L =	3/4	3/4	0,10	0,15	0,17	0,26	0,35	0,46	0,73	1,04	1,40				
	013G0155	L (UK)	3/4	3/4	0,16	0,20	0,25	0,35	0,47	0,60	0,73	0,80	1,00				
RA-N 25	013G0037 013G0038	L =	1	1	0,10	0,15	0,17	0,26	0,35	0,46	0,73	1,04	1,40				

L	indicates angle type valve body - vertical sensor
=	indicates straight type valve body
L(UK)	indicates UK-angle type valve body - horizontal sensor
L - right	indicates right mounted angle valve body
L - left	indicates left mounted angle type valve body
k_{vs}	the k_{vs} value states the flow Q at a maximum lift, i.e. fully open

The RA 2000 range of radiator thermostats have several variations of elements all of which can be connected with the various RA 2000 series valve bodies. Selection of different types of elements depends on the special requirements of geothermal heating systems. For example the RA 2020 element is a tamper-proof version which is installed in schools and in some public buildings. It is supplied as a complete unit that cannot be removed. The scale numbers on the element are visible only through a "window" in the protective cap and can be covered to prevent unnecessary change of setting.

The element can also be made theft-proof by sealing the locking screws. The RA 2060 element is a remote setting element which contains both a setting unit and a sensor. It is used in special conditions where access to the valve body is limited. The main types of the RA 2000 series thermostats elements are shown in Table 3.

3.4 Pre-setting (for maximum flow)

The main purpose of utilizing the radiator thermostats is either keeping constant the cosy room temperature that consumers want, or obtaining an economic heating system with higher differential temperature anticipated and required between supply and return water. The purpose is achieved by pre-setting the valve bodies and adjusting the radiator thermostats.

Before pre-setting the radiator thermostat's valve bodies, some elementary parameters should be

TABLE 3: Types of radiator thermostat's elements (Danfoss)

Type	Code No.	Design	Capillary tube length	Setting range (°C)
RA 2010	013G2010	Element with built-in sensor	-	5 - 26
RA 2012	013G2012	Element with remote sensor	0 - 2 m	5 - 26
RA 2020	013G2020	Tamper-proof element with built-in sensor	-	5 - 26
RA 2022	013G2022	Tamper-proof element with remote sensor	0 - 2 m	5 - 26
RA 2062	013G2062	Remote setting element	2 m	6 - 28
RA 2065	013G2065	Remote setting element	5 m	6 - 28
RA 2068	013G2068	Remote setting element	8 m	6 - 28

known, such as the required heat of the room, the temperature cooling across the radiator, ΔT, and the pressure drop across the valve, Δp.

The required heat of the room is a maximum heating demand for satisfying the coldest condition in the heating period. Different countries may have distinct regulations to calculate the maximum heating demand. The most commonplace method is used by heating system designers, it is to choose the system design temperature so that in an average year there are about two days with a mean outdoor temperature lower than the system design outdoor temperature. The system design outdoor temperature must be selected low enough so that the maximum cooling of the building during the coldest weather to be expected will not bring the indoor temperature below a predetermined value, e.g. 16-17°C. After that, a design indoor temperature is chosen that depends on different requirements for the room. Finally we can calculate the maximum heat loss from the room, i.e. the required heat.

The temperature cooling across the radiator, ΔT, should be selected as high as possible in an economic and probable scope in order to get a higher efficiency of geothermal heating. However, geothermal water temperature below 60°C, is too low to be utilized effectively by selection of higher ΔT. In this case a heat pump can be installed to increase the temperature.

The pressure drop across the valve, Δp, causes noise in the system. To ensure quiet operation, the maximum pressure drop through the RA 2000 series radiator thermostats should not exceed 30 to 50 kPa (0.3-0.5 bar).

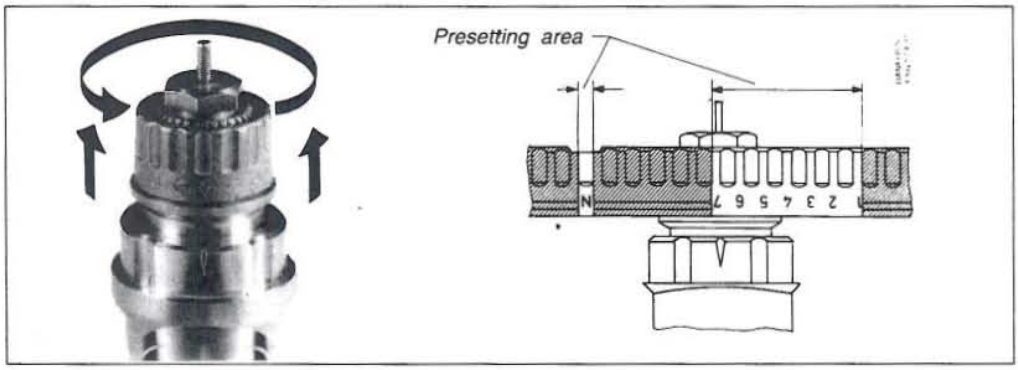

FIGURE 5: Radiator thermostat valve bodies' pre-setting (Danfoss)

With all elementary parameters selected, as stated above, the valve bodies' pre-setting can be carried out. Types RA-N, RA-U and RA-UR have a setting ring (Figure 5) with different numbers from "1" to "7" and a letter "N". This pre-setting value can be calculated by means of the elementary parameters. Each number (1 to 7 and N) corresponds to an exact k_v value, i.e.

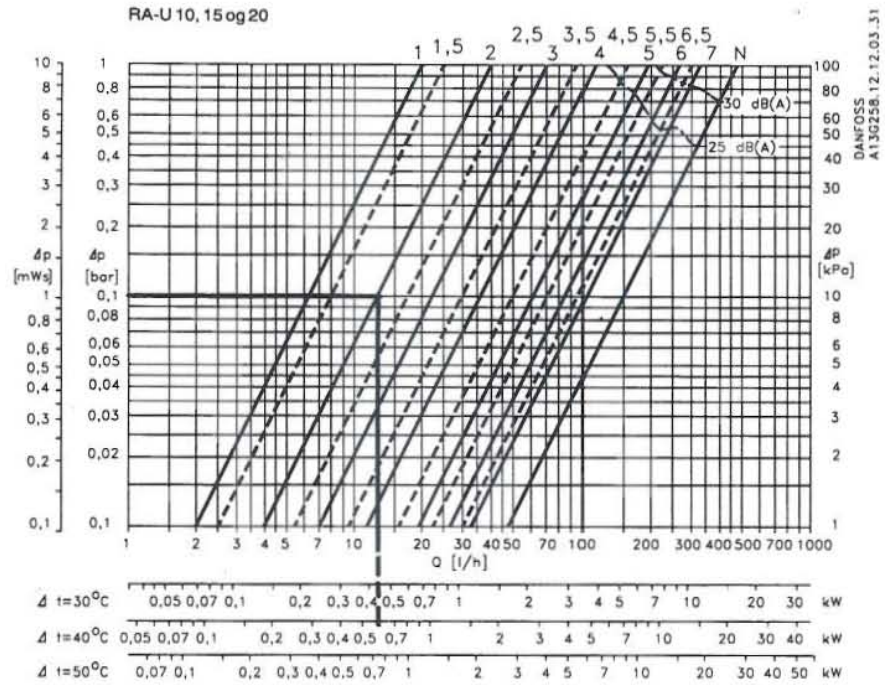

FIGURE 6: Radiator thermostats' RA-U 10, 15 and 20 pre-setting capacities (Danfoss)

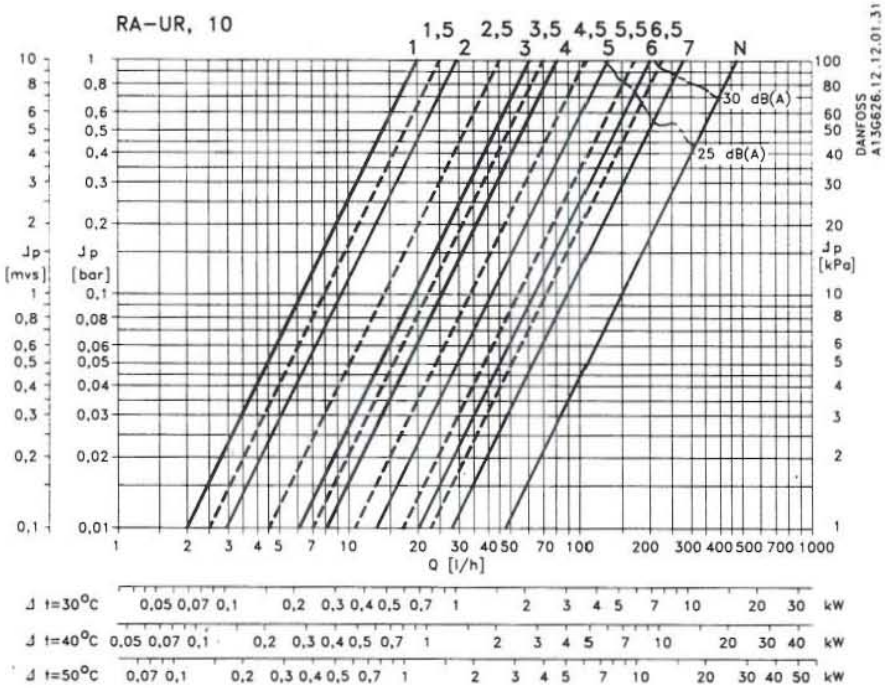

FIGURE 7: Radiator thermostat's RA-UR 10 pre-setting capacities (Danfoss)

the water flow, Q, in m^3/h at a pressure drop, Δp, across the valve of 1 bar. The pre-setting can be set between the values 1, 1.5, 2, ... 6.5, 7, N. The smaller the value, the smaller the flow rate of the valve. At setting N, the valve is completely open. A setting in a shaded area should be avoided. After pre-setting, the sensor element will be mounted and the pre-setting is hidden, and is thus protected against alteration.

We can for example choose a RA-U 10 valve body for a radiator. The geothermal heating system has 80°C supply water temperature inlet in the radiator. We choose the temperature cooling across the radiator, $\Delta T = 40°C$, the pressure drop across the valve, $\Delta p = 0.1$ bar, and the required heat as W = 0.6 kW. So we can get the flow rate: $Q = W / (\Delta T \times 1.16) = 0.6/(40 \times 1.16) = 0.013$ m^3/h. Then the k_v value is calculated, $k_v = Q/\sqrt{\Delta p} = 0.013/\sqrt{0.1} = 0.04$ m^3/h. Finally we can select the setting number according to Table 2 or Figure 6. For this example the setting number should be "2".

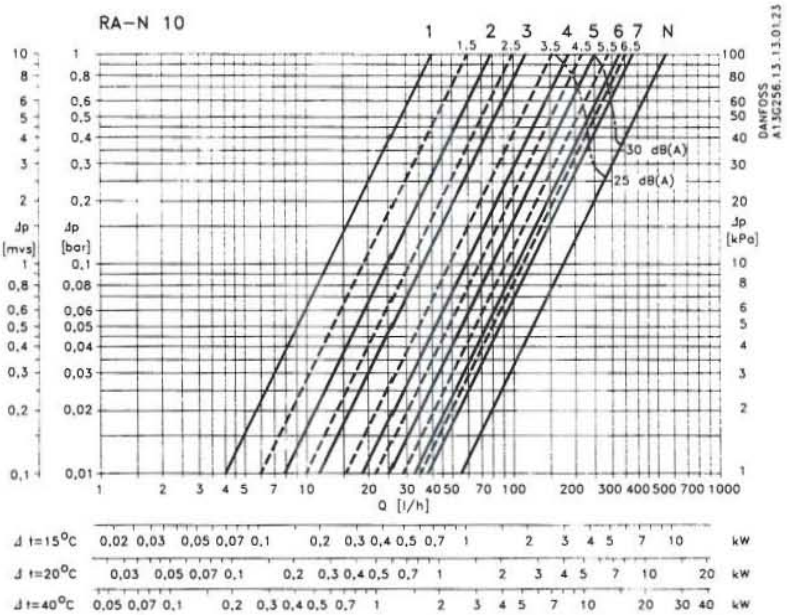

FIGURE 8: Radiator thermostat's RA-N 10 pre-setting capacities (Danfoss)

The steps of pre-setting the valve body are (with reference to Figure 5) first, to remove the protective cap or sensor element, then to raise the setting ring, after that to turn the scale (Figure 5) on the setting ring until the required scale value (setting number) faces the reference mark, finally to release the setting ring. Other RA 2000 series valve bodies can be pre-set by following this procedure (Figures 7 through 11).

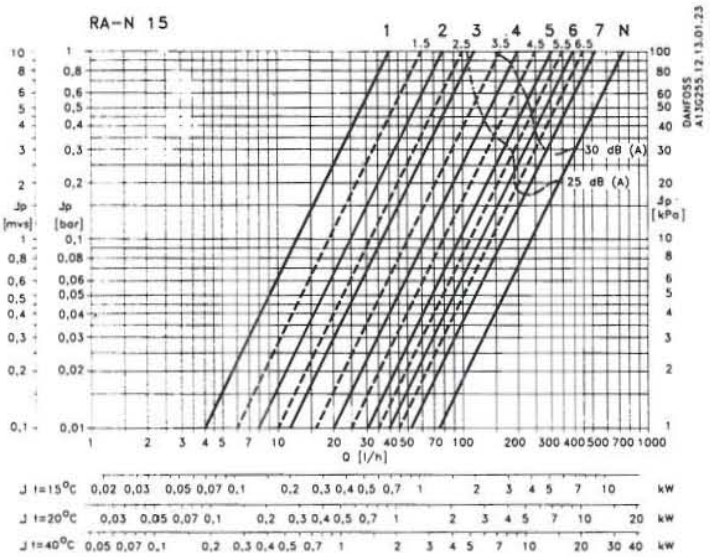

FIGURE 9: Radiator thermostat's RA-N 15 pre-setting capacities (Danfoss)

3.5 Adjustment (setting the temperature)

Pre-setting the valve body is only for the maximum flow rate which satisfies the maximum required heat during the coldest weather condition. This condition, however, is generally a brief period during the whole heating season. This means that the maximum flow rate which has been pre-set is surplus in other weather conditions. The required room temperature will be regulated by adjusting the elements of the radiator thermostats.

The operating principle of the element sensor has been introduced above. After pre-setting the valve body, the thermostatic element will be mounted. The element has a scale on the knob. When the knob is turned, the scale numbers face an indicating point where the setting is marked.

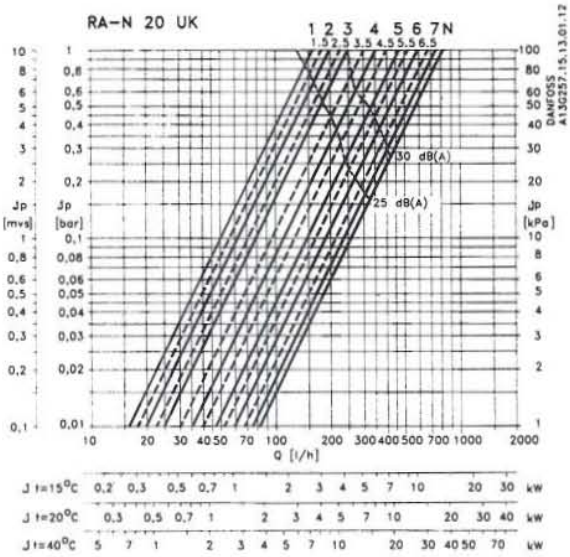

FIGURE 10: Radiator thermostat's RA-N 20 UK pre-setting capacities (Danfoss)

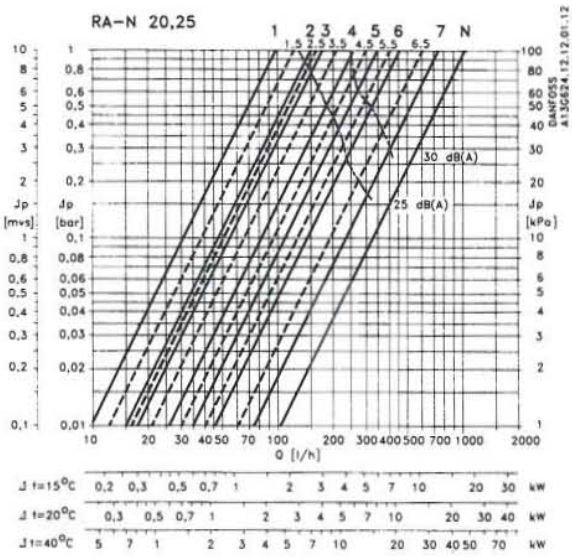

FIGURE 11: Radiator thermostat's RA-N 20, 25 pre-setting capacities (Danfoss)

The RA 2000 series radiator thermostats have a temperature range between 5 and 26°C at P-band X_p = 2°C. The P-band of a valve is the change in room temperature necessary to make the valve move from its closed position to a position that will give the required flow at maximum water volume. Figure 12 shows roughly the correlation between scale numbers and room temperature.

3.6 Selection and installation

Selection:

Selection of the valve bodies of radiator thermostats depends on the different heating systems. The RA 2000 series radiator thermostats have the same operating principle and similar constructions. The main distinction between them is the different k_v value indicating the flow capacity under a pressure drop (1 bar) as mentioned before. The RA 2000 radiator thermostats, especially RA-U and RA-UR, have a lower k_v value, RA-U with k_v = 0.02-0.48 m^3/h, and RA-UR with k_v = 0.02-0.47 m^3/h. This is quite suitable for economical geothermal heating systems for which higher ΔT (40-50°C) and lower flow rates are anticipated. The RA-N valve body has an intermediate k_v value (0.04-1.04 m^3/h) and is fitted for a conventional heating systems or other geothermal heating systems for which the ΔT (approx. 30°C) is lower than the economical geothermal heating system. Other RA 2000 radiator thermostat's valve bodies that are not introduced above, e.g. RA-FN and RA-G

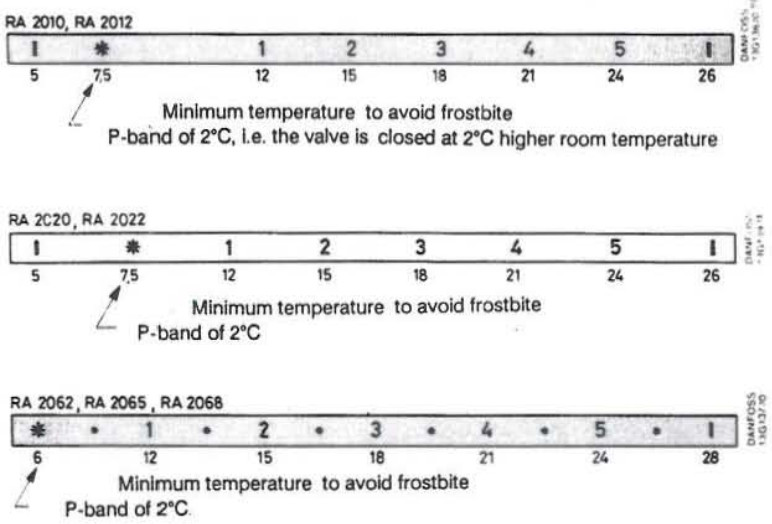

FIGURE 12: Temperature setting capacities of radiator thermostats (Danfoss)

are suitable for conventional heating systems. The RA-FN valve body has a higher k_v value (0.19-1.30 m^3/h) than RA-N, RA-U and RA-UR, and is applied to conventional two-pipe systems with pump. The RA-G valve body has the highest k_v value (0.40-5.20 m^3/h) of the RA 2000 series radiator thermostats. It is used for two-pipe systems with natural circulation or one-pipe systems with bypass under the radiator.

Selection of thermostatic elements depends on installation conditions and some special requirements. To ensure the correct function it is important that room air can circulate freely around the thermostatic sensor so that it always "feels" the temperature in the room. Some brief suggestions on selecting thermostatic elements are described below. Elements with built-in sensors (RA 2010, RA 2020) are used for free-standing radiators where room air is able to circulate freely around the thermostat. Radiator thermostatic elements with remote sensors are used on radiators located behind curtains, furniture, under broad window shelves, or radiators exposed to draughts. The remote sensor must be located at a point where it can register the desired room temperature. The remote setting elements (RA 2062, RA 2065 and RA 2068) are used where the radiator is panelled in or is otherwise inaccessible and must be placed where they can easily be operated. The tamper-proof, or theft-proof elements should be considered in special places, where this feature is needed.

Installation:
The installation pattern of the radiator thermostats will directly influence the application functions. Different radiator thermostats have distinct installation regulations in order to get ideal performance. The RA-N and RA-U valve bodies should be installed in the inlet of the radiator. The RA-UR valve body, which is produced for replacing an old kind of return temperature limiters, should be mounted in the return of the radiator (Figure 13).

In addition, built-in sensors of radiator thermostats that are installed in the inlet of the radiator should be fitted horizontally. This ensures that the effect of heat convection from the valve body is minimized and results in accurate room temperature. The radiator thermostats with RA-UR valve bodies should be mounted in the return of the radiator, either in a horizontal or vertical position, because the effect of the heat convection from the low temperature return water is not so evident. When curtains cover the sensor or the sensor is affected by surface pipes, it is necessary to select a remote sensor. The remote sensor must be mounted on the wall, away from curtains and surface pipes, or on the skirting board beneath the radiator if free of surface pipes.

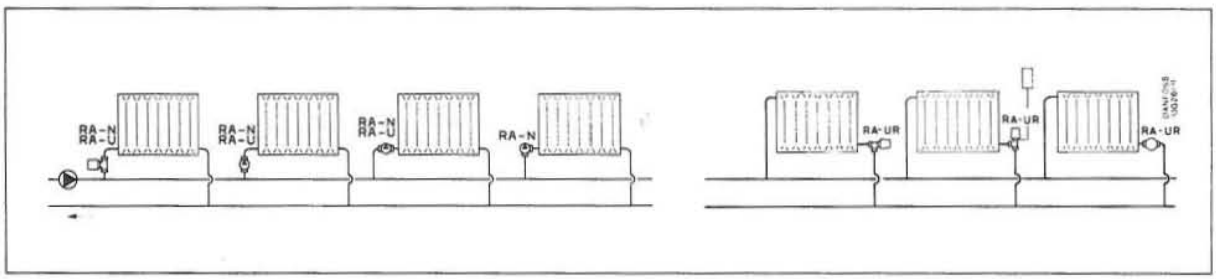

FIGURE 13: Installation pattern of radiator thermostats (Danfoss)

4. APPLICATION OF TEMPERATURE CONTROLLED VALVES

4.1 General

Temperature controlled valves are used to control the required constant temperature of different systems. Two types of temperature controlled valves that are being used to control the primary water temperature of heat exchanger in geothermal heating systems are introduced in this chapter. They are AVTB valve for controlling the water temperature of heat exchangers for radiators and AVTQ valve for controlling the water temperature of heat exchangers for domestic hot water.

4.2 Temperature controlled valve type AVTB

Construction and operating principle:
The temperature controlled valve AVTB is used to control the water temperature of heat exchangers in geothermal house heating systems. The valve's construction is shown in Figure 14.

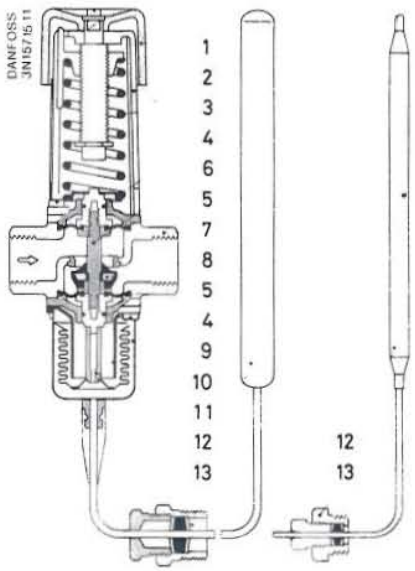

1. Setting knob
2. Spring housing
3. Setting spring
4. O-ring
5. Diaphragm
6. Spindle
7. Valve body
8. Valve cone
9. Bellows unit
10. Bellows stop
11. Pressure stem
12. Sensor
13. Capillary tube gland

FIGURE 14: Construction of the temperature controlled valve AVTB (Danfoss)

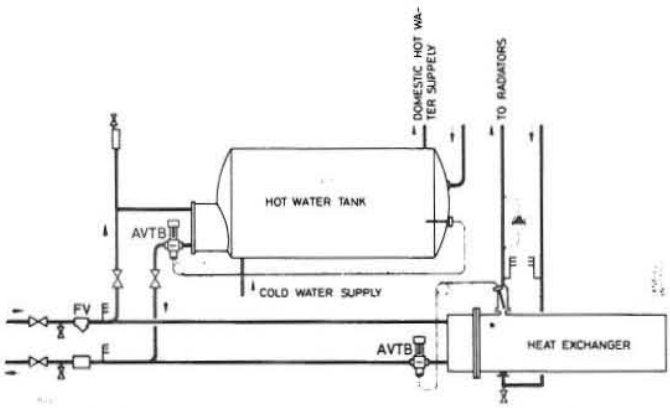

FIGURE 15: A typical application of an AVTB valve (Danfoss)

The operating principle of the valve is similar to the radiator thermostats which were discussed in the last chapter. The complete AVTB valve has a setting knob, a valve body, a bellows element with capillary tube and a sensor pocket. The sensor pocket is installed to contact the system fluid of which the required temperature needs to be controlled. The sensors use a saturated vapour charge. When the temperature of the controlled fluid is rising or falling, the pressure of the saturated vapour will respond the same trend. The pressure variations will cause the bellows to move the spindle to close or open the valve body that is installed in the pipe. A typical application of the valve is shown in Figure 15 and the sizes of the AVTB valve are listed in Table 4.

TABLE 4: Sizes of AVTB valves (Danfoss)

Type	Setting range (°C)	Capacity k_{vs} (m^3/h)	Max. sensor temp. (°C)	Internal thread		External thread	
				Connection ISO 7/1	Code Nos.	Connection ISO 228/1	Code Nos.
AVTB 15	0 - 30	1.9	55	R_p 1/2	003N2232	G 3/4 A	003N5101
	20 - 60		90		003N8229		003N5114
	30 - 100		130		003N8141		003N5141
AVTB 20	0 - 30	3.4	55	R_p 3/4	003N3232	G 1 A	003N5102
	20 - 60		90		003N8230		003N5115
	30 - 100		130		003N8142		003N5142
AVTB 25	0 - 30	5.5	55	R_p 1	003N4232	G 1 1/4 A	003N5103
	20 - 60		90		003N8253		003N5116
	30 - 100		130		003N8143		003N5143

Setting the required temperature:
Different temperature ranges can be controlled by using the AVTB valve through setting the required temperature. An example is given in the following:

Hot water temperature control in hot water tanks:
- Primary medium: Water
- Given load: 31 kW
- Primary temperature drop ΔT: 20°C
- Differential pressure Δp across the valve: 1.7 bar
- Max. hot water temperature: 55°C
- Water volume Q: $(31 \times 0.86)/20 = 1.3\ m^3/h$

Required:
- The correct valve size
- Temperature range and P-band

Using Q and Δp, the necessary k_v value ($k_v = Q/\sqrt{\Delta p}$) can be read from the k_v diagram (Figure 16). In this example k_v is 1. On the k_v scale in the AVTB diagram (Figure 17), draw a line horizontally to intersect the columns for recommended sizing range. Select the smallest possible valve, here the AVTB 15. A temperature range of 30-100°C can be assumed as suitable for this example.

The P-band (X_p, proportional band) and final temperature range can also be read from the AVTB diagram. The required closing temperature can be read from the scale of the valve selected. However, (Figure 17) there are two temperature ranges that meet the requirement for a closing temperature of 55°C.

X_p is 9°C for the range 30-100°C, which means that the control valve will yield the calculated capacity at sensor temperature of 55°C minus 9°C = 46°C. For the range 20-60°C, X_p = 4°C. This means that the control valve will yield the calculated capacity at 55°C minus 4°C = 51°C.

To ensure the most stable control an AVTB 15 with a range 20-60°C should be chosen. The water in the hot water tank will reach the closing temperature, 55°C, only when there has been

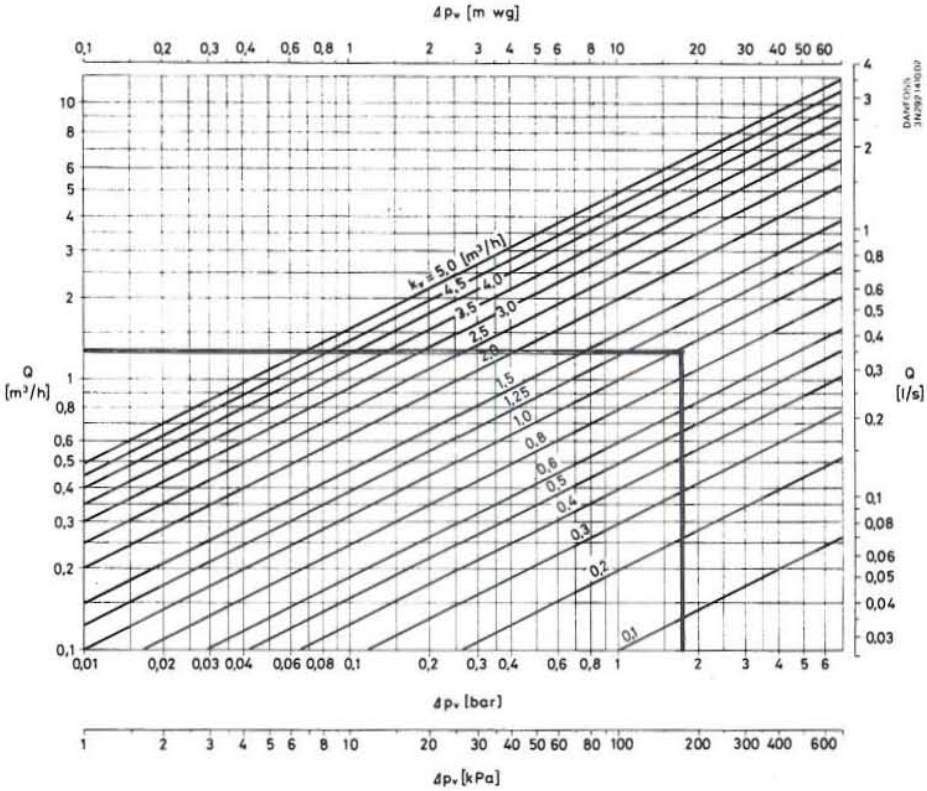

FIGURE 16: k_v diagram of the AVTB valve (Danfoss)

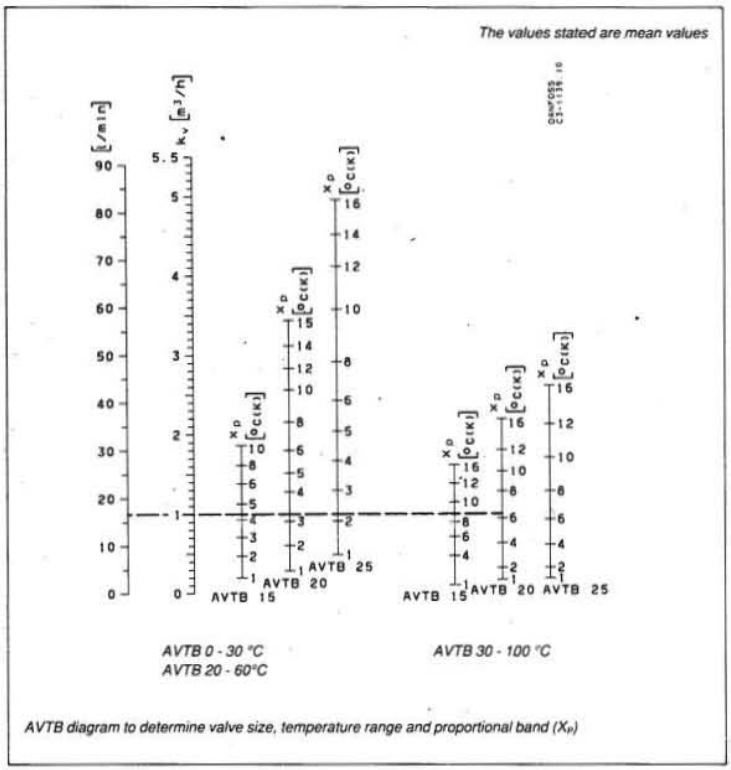

FIGURE 17: AVTB valve setting diagram (Danfoss)

no hot water demand for some time and the water in the hot tank will be maintained at a relatively constant temperature, 51-55°C.

After the calculation and selection above, we can set the valve. The k_v value is indicated by the k_v scale below the setting knob (0, 1, 2, 3, 4, 5). Turning the setting knob anti-clockwise increases the k_v value, turning it clockwise reduces it.

Installation:

The valve should be fitted at an easily accessible point with flow in the direction indicated by the arrow. It can be fitted in any position, either flow or return. The sensor should be fitted in a suitable place where its whole surface comes into contact with the medium to be temperature-controlled. Avoid sharp bends in the capillary tube. If the sensor is to be fitted into a pocket,

the space between sensor and pocket must be filled with copper paste to improve the heat transfer from pocket to sensor.

Different versions of sensors have different installation requirements. When installing versions with large sensors (210 mm) the free end of the sensor must never be mounted higher than the end to which the capillary tube is connected. When installing versions with a small sensor (190 mm) the free end must never be mounted horizontally or lower than the end to which the capillary tube is connected. The sensor must be located above the medium flowing through the valve. On versions with small sensors ø9.5 (160 mm) the sensor can be mounted in any position even warmer or colder than the valve.

4.3 Temperature and pressure controlled valve type AVTQ

Geothermal house heating systems are, in some cases, connected with hot tap water service. The AVTQ is a temp-erature and pressure controlled thermostatic valve for individual heat exchangers, i.e. hot water service supply in district heating systems. The valve avoids excess temperatures in the heat exchangers idling by instantaneously closing the primary water supply when hot water tapping stops.

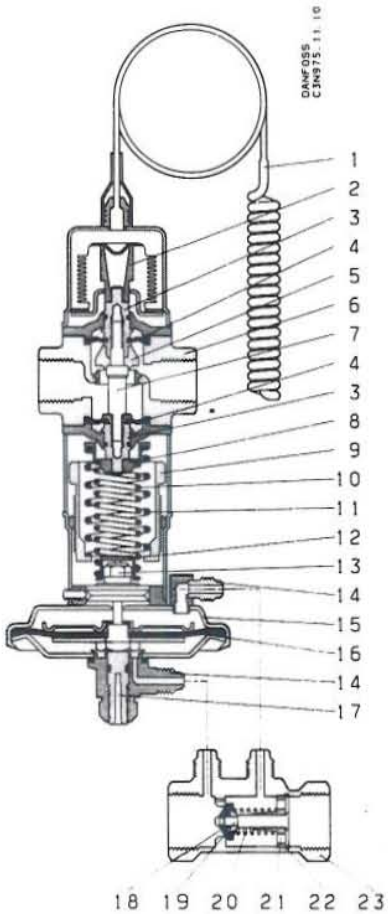

Temperature control
1. Sensor
2. Pressure stem
3. O-ring
4. Diaphragm
5. Valve cone
6. Valve housing
7. Valve spindle
8. Upper spring retainer
9. Setting unit for operation temperature
10. Setting spring for idle operation
11. Setting spring for normal operation
12. Lower spring retainer
13. Gland
14. Nipple for impulse tubes
15. Diaphragm unit
16. Diaphragm
17. Setting unit for idle operation temperature

Control valve
18. Valve cone
19. Valve spindle
20. Spring
21. Spring retainer
22. Locking ring
23. Valve housing

FIGURE 18: Construction of the temperature and pressure controlled valve AVTQ (Danfoss)

Construction and operating principle:
The valve type AVTQ consists of a temperature control and a control valve. The construction is shown in Figure 18. The temperature control is mounted in the primary return and connected to the control valve via impulse tubes mounted on the cold water pipe in the hot water service system (Figure 19). When hot water is tapped, cold water will run through the control valve and differential pressure crossing the control valve will cause the moving of the diaphragm unit of the temperature control. As a result, the temperature controlled valve will be opened instantaneously for the water flow from the primary heating system to exchange the heat to the secondary (cold water) system. After the temperature control is opened, the sensor, which has similar functions as others discussed above, will monitor the hot tap water temperature to keep a relatively constant required temperature by opening or closing of the temperature control. The temperature control closes again, instantaneously, when the tapping stops.

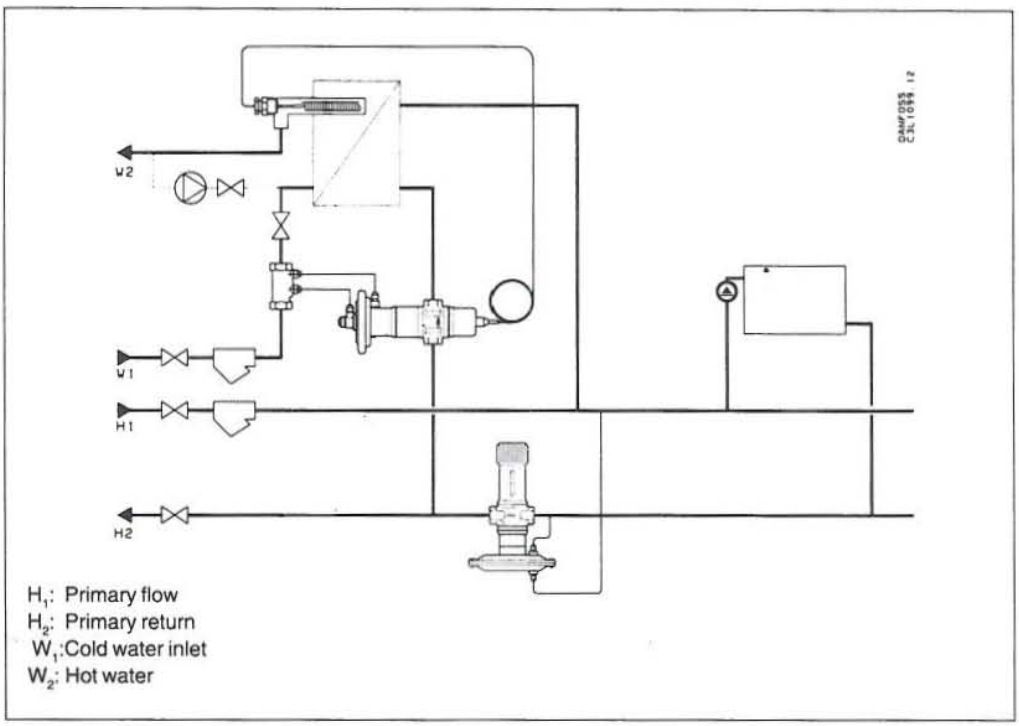

FIGURE 19: Typical application of the AVTQ valve (Danfoss)

Types of temperature controlled valves AVTQ:
Two types of temperature control are produced, shown below (Table 5):

TABLE 5: Types of the temperature and pressure controlled valves AVTQ (Danfoss)

Type	Connection		k_{vs}-value	Code no.
	Internal thread ISO 7/1	External thread ISO 228/1		
AVTQ 20	R_p 3/4	-	3.4	003L3002
AVTQ 20	-	G 1 A	3.4	003L3006

Setting:
The temperature control of the AVTQ valve has two settings (Figure 20):

A. Setting the hot water service temperature.
The factory setting is about 50°C. This setting can be changed within a range of ± 10°C by turning the adjusting wheel with a screw driver. Each graduation on the adjusting wheel corresponds to a hot water temperature change of 0.3°C. The temperature is reduced by turning the adjusting wheel clockwise.

B. Setting the idle operation temperature.
When no hot water is required, the temperature control keeps the heat exchanger temperature at a level lower than the hot water temperature setting A. The idle operation temperature can be set by turning the screw in the bottom of the diaphragm housing, the setting range being 0 to 20°C lower than the hot water temperature setting A.

Sizing:
The purpose of sizing is to choose the correct AVTQ thermostatic valve and get the proportional band:

Example:
Choose the correct AVTQ thermostatic valve for the following data:

Water flow: 10 l/min (about 0.6 m^3 /h)
Cold water temperature: T_4 = 10°C
Hot tap water temperature: T_3 = 50°C
Resulting in a heat exchanger effect of
W = 0.6 × 1000 × (50-10) = 24000 kal/h, about 28 kW

Primary water flow temp.: T_1 = 80°C
Primary water return temp.: T_2 = 30°C
Primary water diff. temp.: T_1 - T_2 = ΔT_f = 80 - 30 = 50°C
Diff. pressure across the temp. control: Δp_v = 0.5 bar

The correct valve is shown in the sizing diagram (Figure 21). Input heat exchanger output 28 kW is on the scale at the upper left edge of the diagram. Draw a line from this point vertically down until it intersects the line ΔT_f = 50°C. Then continue from this point horizontally towards right until intersecting with the line Δp_v = 0.5 bar. With AVTQ 20 the proportional band is about 7°C.

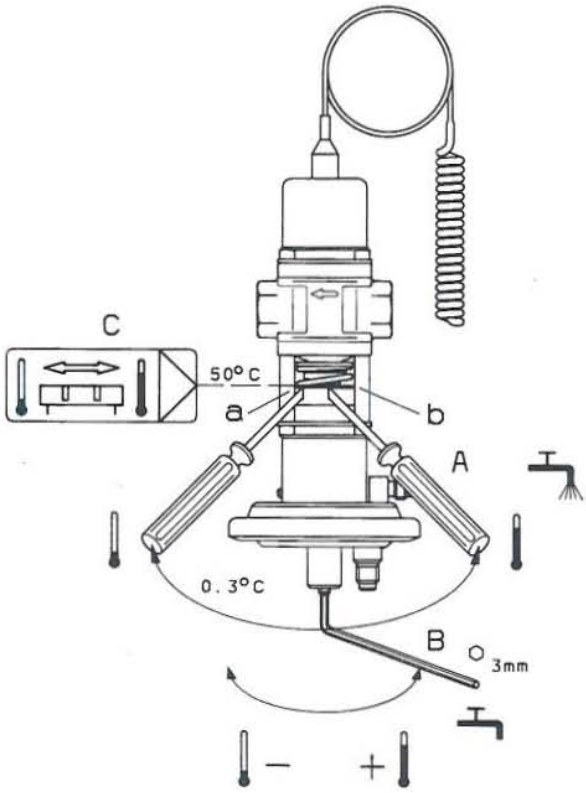

FIGURE 20: Setting of the AVTQ valve (Danfoss)

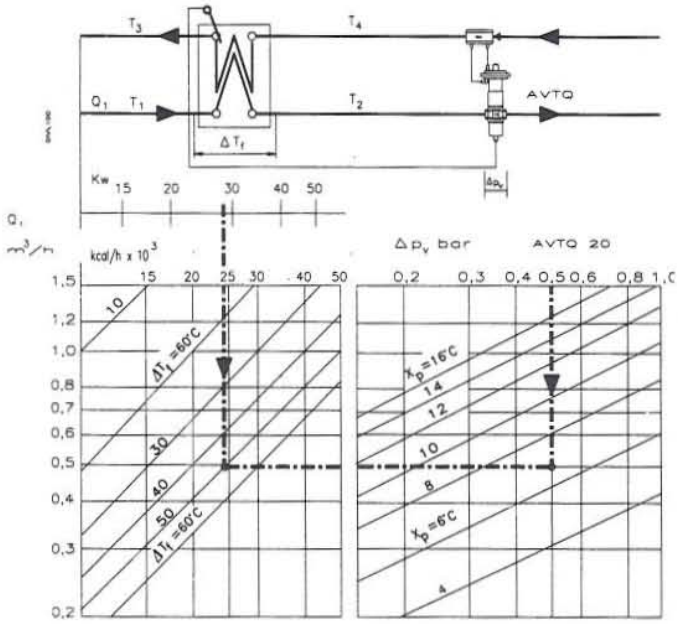

FIGURE 21: The sizing diagram of the AVTQ valve (Danfoss)

5. APPLICATION OF PRESSURE CONTROLLED VALVES

5.1 General

Keeping constant pressure difference in a heating system is a basic requirement in order to limit a stable flow rate. This task can be done by using some pressure controlled valves. A large range of pressure controlled valves are produced at present by some factories. The AVD/AVDA and AVDS/AVDSA valves are introduced briefly in this chapter. They are being utilized as differential pressure control, flow limiters or pressure relief controls in geothermal house heating systems and conventional district heating systems.

5.2 Construction and operating principle

The constructions of the AVD/AVDA and AVDS/AVDSA valves are shown in Figure 22.

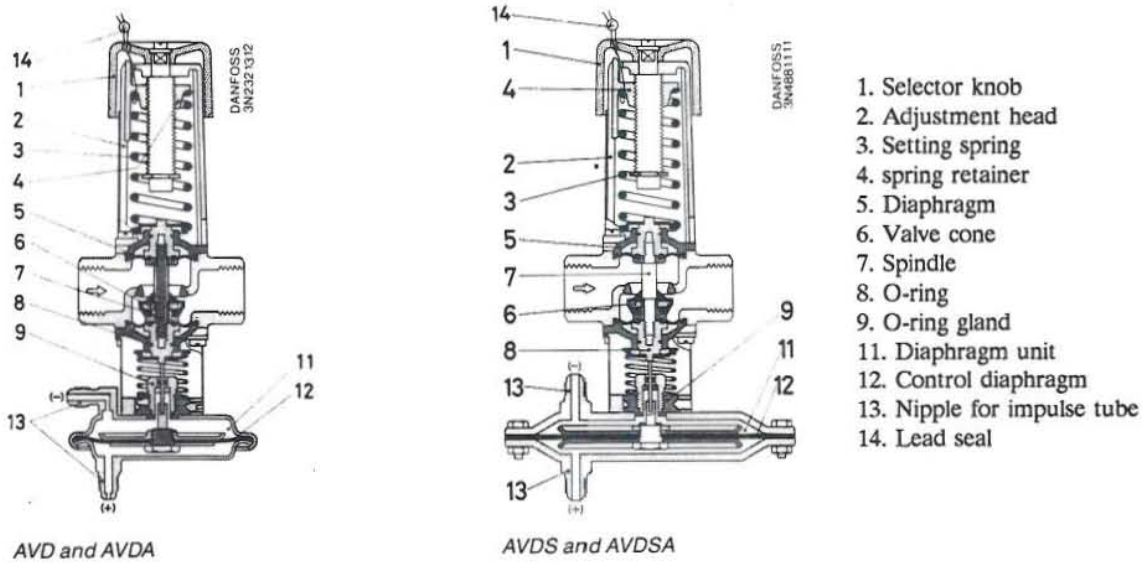

FIGURE 22: Construction of pressure controlled valves
AVD/AVDA and AVDS/AVDSA (Danfoss)

The valves mainly consist of a selector knob, a valve body and a diaphragm unit. In the diaphragm unit, the pipe connection (+) is to be connected to the flow pressure, and the pipe connection (-) to the return pressure. The different pressure between the flow and return will force the diaphragm to move the spindle of the valve body. At the same time, the setting spring will balance the force from the diaphragm unit. As a result, the pair of the effort will open or close the valve body.

5.3 Application

The different applications of AVD/AVDA and AVDS/AVDSA are illustrated in Figure 23. The AVD and AVDS controls can be used as differential pressure controls or flow limiters. The AVDA and AVDSA controls can be used as pressure relief controls.

Differential pressure control (Figure 23a)
AVD and AVDS can be used as differential pressure controllers to keep a relatively constant

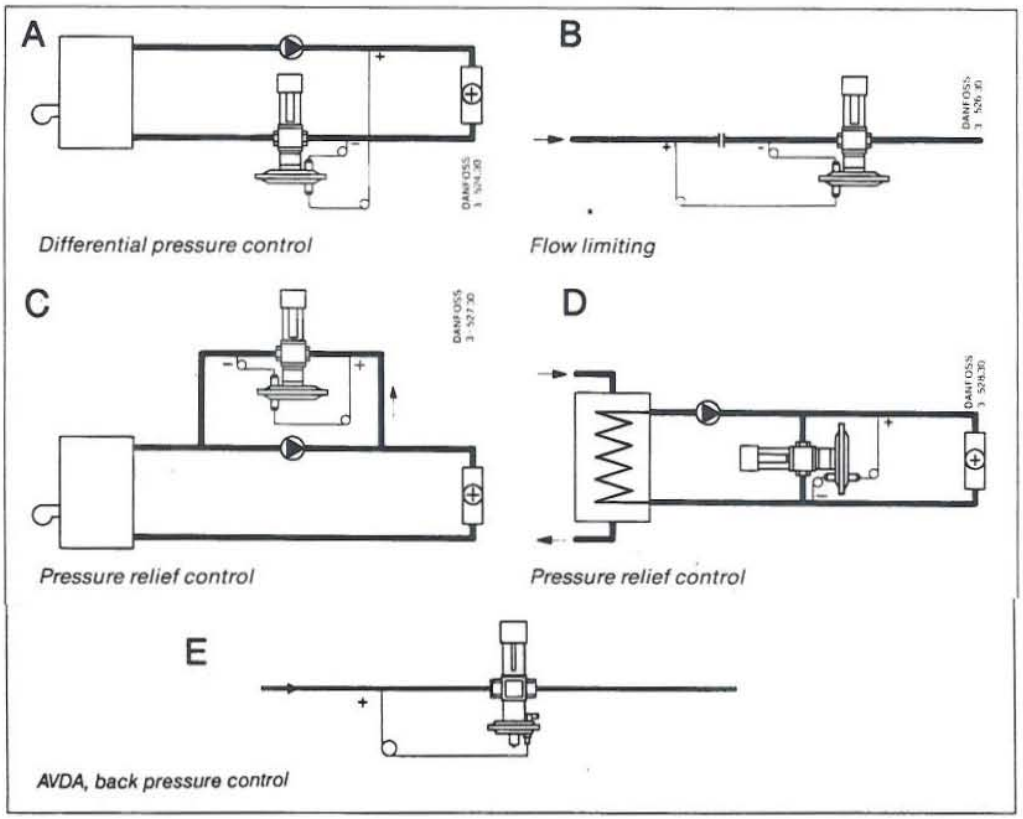

FIGURE 23: Application of AVD/AVDA and AVDS/AVDSA pressure controlled valves (Danfoss)

differential pressure between flow and return of heating system. The valve body will be closed when the differential pressure increases. The letters DA-RA are typecasted in the valve body by inverse direction to indicate different functions (as a closing valve or an opening valve). When AVD or AVDS are used as a differential pressure regulator, closing when the differential pressure increases, the letters DA must be non-inverted

Flow limitting (Figure 23b)
The AVD or AVDS can also be used as a flow limiter to limit a stable flow rate. The valve will be closed when the differential pressure increases. The letter DA must be non-inverted in this case.

Pressure relief control (Figure 23c and d)
AVDA and AVDSA valves can be used as pressure relief controls (Figure 23c). The valve is connected to a by-pass pipe joined with a system circulation pump. The valve is used as an opening valve, i.e. it opens when the differential pressure increases in order to maintain a constant flow pressure. In this case the letter RA must be non-inverted.

The valve is installed in a by-pass line from the consumer (Figure 23d). It opens when the differential pressure increases for relieving the high flow pressure and keeping a constant differential pressure of the heating systems.

Maintain back pressure (Figure 23e) AVDA is used to maintain back pressure in geothermal district heating systems, for the return water can not run directly below a required back pressure. It is used to satisfy the flow pressure of the highest users in high buildings or users farthest away in a large heating system.

5.4 Setting

As recounted above, AVD and AVDS controls can be used as differential pressure controls or flow limiters, AVDA and AVDSA controls can be used as pressure relief controls and AVDA can be used for maintaining back pressure. The differential pressure, relief pressure and back pressure can be set with the selector knob after calculation. An example of where AVD/AVDS is installed as a differential pressure control is given below. The necessary k_v value is determined using the given flow volume, Q, and the differential pressure Δp_v. A suitable valve size and P-band, X_p, can then be chosen.

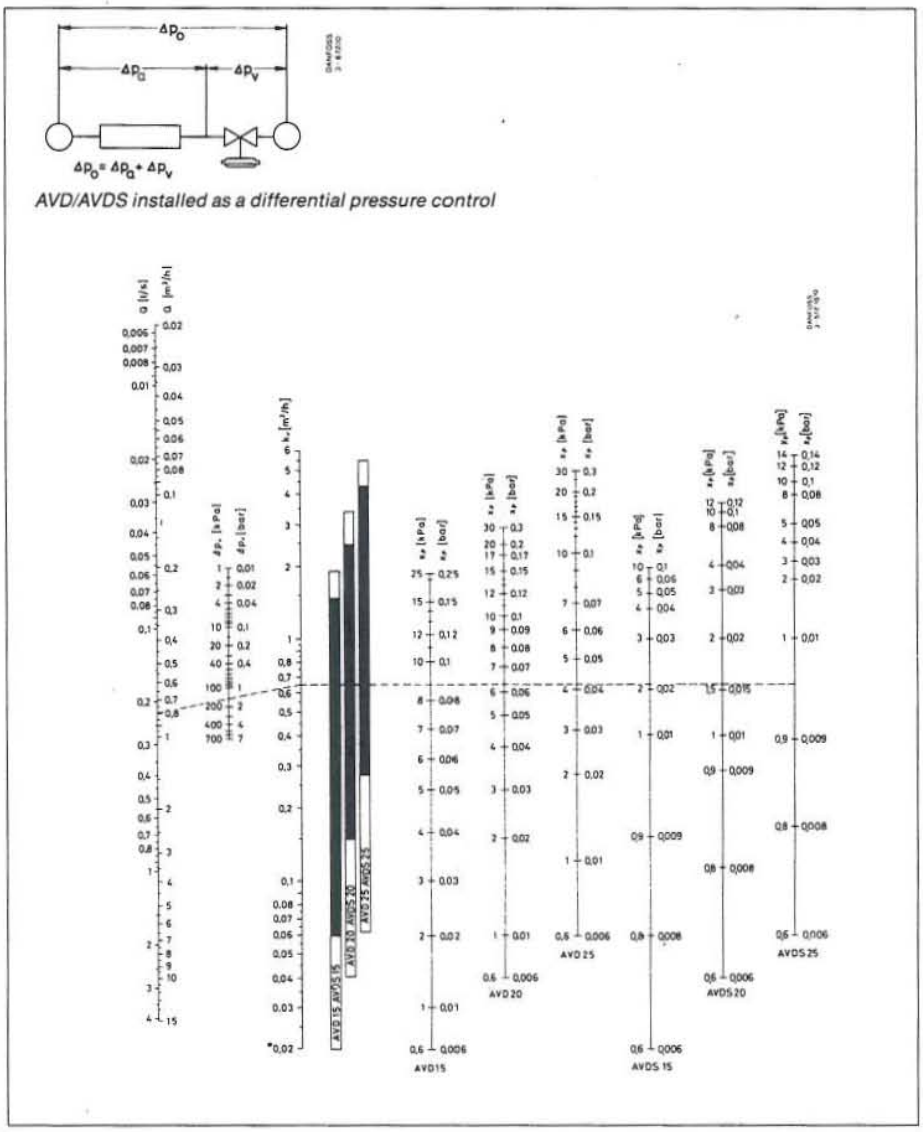

FIGURE 24: The sizing diagram of the AVD/AVDS valve (Danfoss)

Differential pressure control

Given:

Flow volume: $Q = 0.8\ m^3/h$

Differential pressure across system: $\Delta p_0 = 1.8$ bar

Differential pressure across user: $\Delta p_a = 0.3$ bar

Required:
a) Correct valve size
b) Proportional band, X_p
c) Setting value

Method:
a) Differential pressure across valve, $\Delta p_v = \Delta p_0 - \Delta p_a = 1.8 - 0.3 = 1.5$ bar. Connect points $Q = 0.8\ m^3/h$ and $\Delta p_v = 1.5$ bar in the diagram (Figure 24) and extend the line to intersect the k_v scale; $k_v = 0.65\ m^3/h$. Continue horizontally from the k_v scale to intersect the column for the recommended application range. Never select a valve larger than necessary. Here, the choice would be an AVD 15 valve.

b) The proportional band, X_p, is determined by continuing horizontally to intersect the X_p scale for the valve selected. For this example, $X_p = 0.089$ bar.c) Setting is carried out using a pressure gauge or in accordance with the indicative setting (Figure 25).

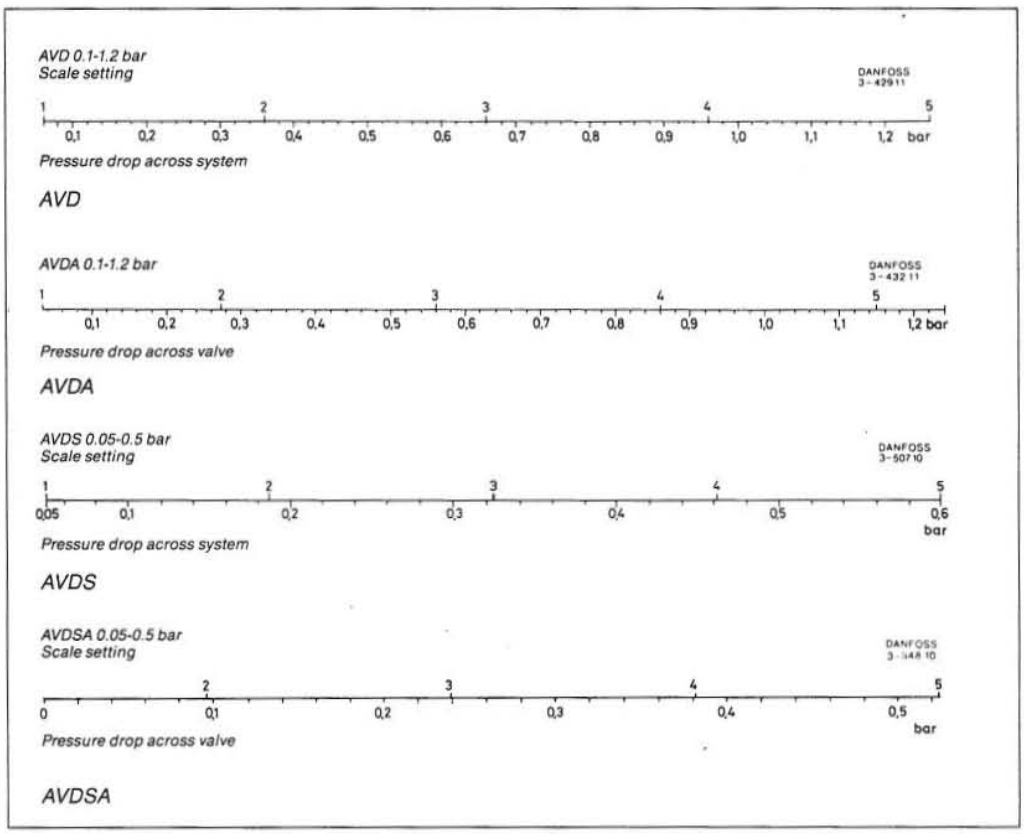

FIGURE 25: Relation between scale numbers and differential pressure, indicative values only (Danfoss)

6. CONTROL SYSTEMS FOR GEOTHERMAL HOUSE HEATING

6.1 Single pipe house heating

The different geothermal district heating systems have been expounded in the first chapters. A geothermal single pipe heating system is adopted for a high quality geothermal fluid, i.e. low content of dissolved minerals form scaling to damage the heating system. This system uses the geothermal fluid directly. The used fluid is discharged to waste water pipelines (Figure 1d). Some of the control facilities that have been introduced are installed in houses in order to utilize the geothermal energy efficiently and to obtain comfortable effects. The geothermal house heating connection for a single pipe system is introduced below.

The connection of a control system for a geothermal house heating single pipe system is shown in Figure 26. A ball-valve or a gate-valve is connected with a pipe from a heating service. The ball-valve is used to close the house heating system if some equipment needs to be repaired. A strainer is installed to filter the geothermal water to keep some facilities from damage. A sealed flow limiter is fitted by the heating service to limit the flow rate, allowing the consumer to use no more than the limited flow rate. A flow meter is used to measure how much geothermal water has been consumed by the user, so he can be charged accordingly. A branch pipe is connected to the domestic hot tap water. A check valve is employed in this branch pipe to avoid flow backwards if the geothermal heating system supply pressure is lower than the domestic cold water supply pressure. The cold tap water is rich in oxygen and would cause corrosion. After the branch pipe, a flow limiter is installed to limit the flow rate of house heating systems, a pressure gauge for indicating supply pressure front and an AVD pressure controlled valve.

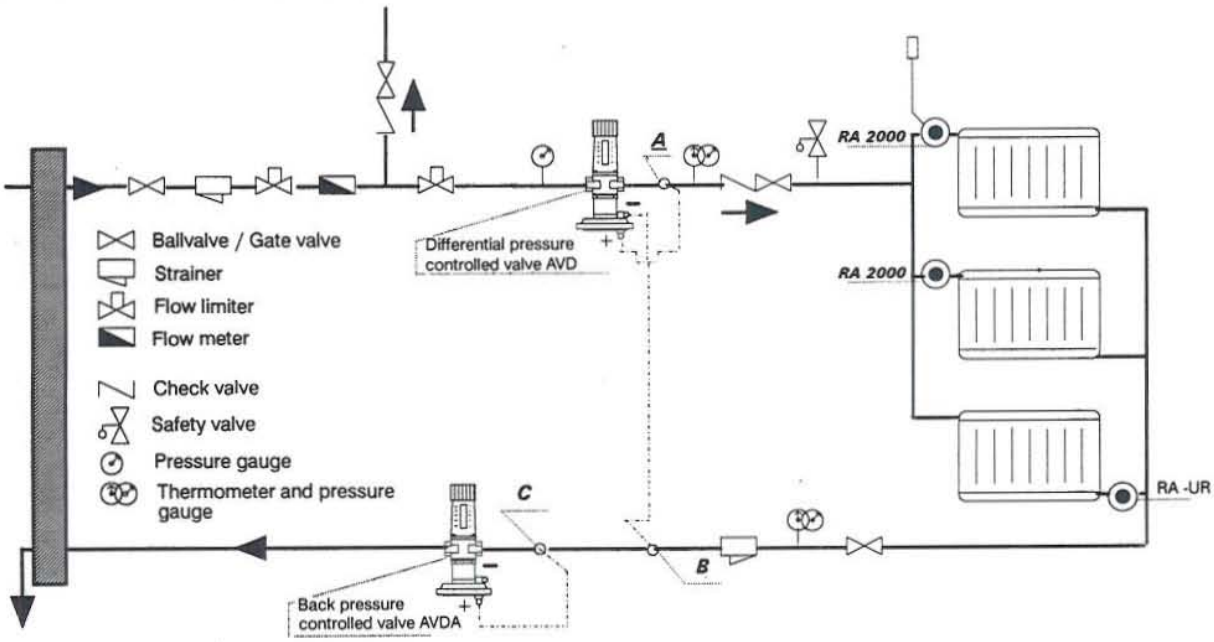

FIGURE 26: A control system for a geothermal house heating single pipe system (Danfoss)

A pressure controlled valve AVD, introduced in the last chapter is installed between the supply pipe and the return pipe to keep a constant differential pressure in the house heating system. The differential pressure value of the heating system can be pre-set after calculation, the value should, in most cases, be less than 1 bar to protect the RA 2000 series radiator thermostats in an allowed different pressure drop.

An AVDA pressure controlled valve is used as a back pressure control in the single pipe system to maintain back pressure, as the spent fluid for the single pipe system is charged to waste directly. Without the back pressure control, the back pressure of a heating system would be very low, which might lead to the following:

1. The AVD being used as a differential pressure (Δp_s) control and is, in most cases, pre-set at less than 1 bar. If the back pressure (Δp_b) is very low, the supply pressure ($\Delta p_a = \Delta p_s + \Delta p_b$) would be too low to pipe the geothermal water to users which are connected with high buildings or distant users.

2. Furthermore, due to low supply pressure to the distant users or high buildings, the house heating system would be empty and the air rich-in oxygen would get into the pipelines, causing corrosion.

3. On the other hand, if the supply pressure can satisfy the users farthest away or high buildings without the back pressure control and at the same time keeping the differential pressure less than 1 bar, the supply pressure would be very high, which would damage some equipment. So, the back pressure controlled valve AVDA plays a very important role in the geothermal single pipe house heating system.

The RA 2000 series radiator thermostats are installed as inlet or outlet of radiators to keep a constant indoor temperature. The installation patterns are dependent on the different types of RA 2000 series radiator thermostats and/or the distinct installation conditions. For example the RA-UR valve should be fitted in the outlet of the radiator. As introduced in Chapter 3, the RA 2000 series radiator thermostats can be pre-set according to the heat requirement of the user house and can be adjusted for different required indoor temperature. Two thermometers and a pressure gauge are fitted separately in the supply/return pipe to indicate the inlet/outlet temperature and the pressure of the heating system. A safety valve is installed at the end of the supply pipe to avoid superhigh pressure to the house heating equipment.

6.2 Double pipe house heating

The double pipe system is adopted where the geothermal fluid has a temperature range of 100°C to 130°C. A part of the return water is mixed with the original geothermal water in order to obtain a constant supply temperature of e.g. 80°C. The remains of the return water is discharged to waste or re-injected (Figure 1e).

The connection (Figure 27) of a double pipe geothermal house heating system is the same as that of the single pipe system, not including the back pressure controlled valve AVDA. The back pressure of the heating system is controlled in a pumping station in which the return water is collected and mixed partially with the original geothermal water. Other equipment in the system have the same function as in the single pipe system.

6.3 House heating with heat exchangers

Heat exchangers are being used to separate the geothermal fluid from the water in the heating systems for example when the geothermal water contains high concentration of dissolved minerals or is of high temperature and pressure. The function of heat exchangers is to transfer the heat from the geothermal fluid to water in the heating system. The types of heat exchangers

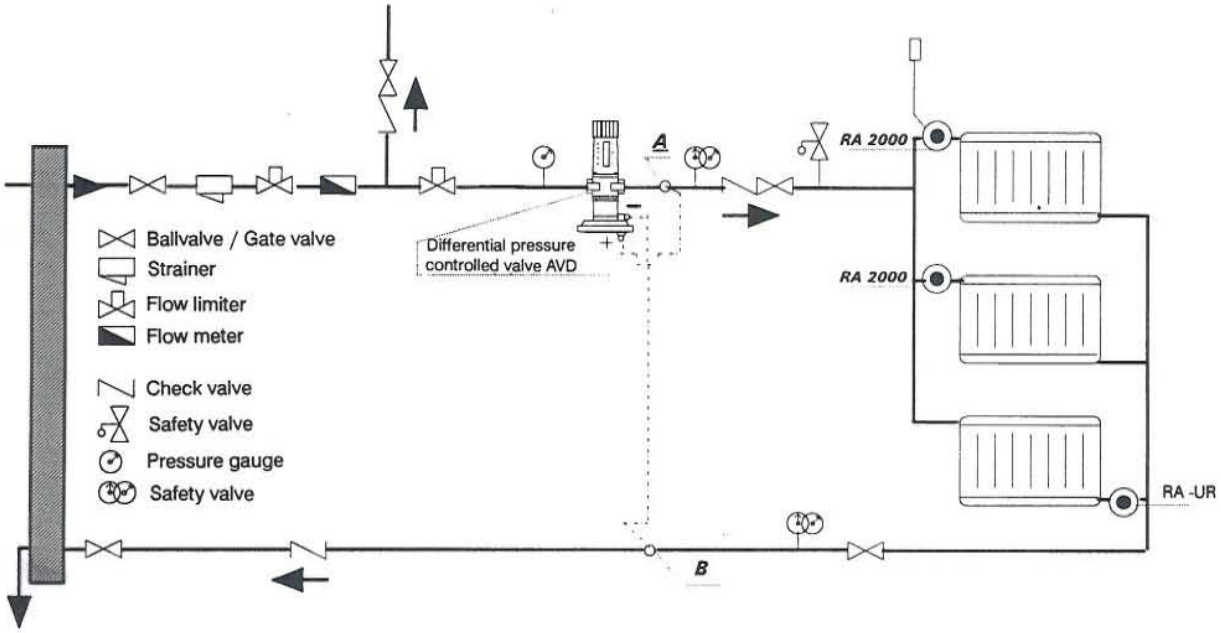

FIGURE 27: A control system for a geothermal house heating double pipe system (Danfoss)

commonly used in geothermal applications at present are: 1) THE-Tubular heat exchanger; shell and tube; fluidized bed; 2) PHE-Plate heat exchanger; 3) DHE-Downhole heat exchanger.

High capacity heat exchangers are used as central heat exchangers, installed in central pumping stations (Figure 1a, b, and c). On the other hand, some small plate heat exchangers are produced to suit the individual users. The control system for the geothermal house heating with heat exchangers is introduced in this chapter. Some of the control equipment which has been introduced in this report will be presented. The connection of the control system for geothermal house heating with heat exchangers is shown in Figure 28.

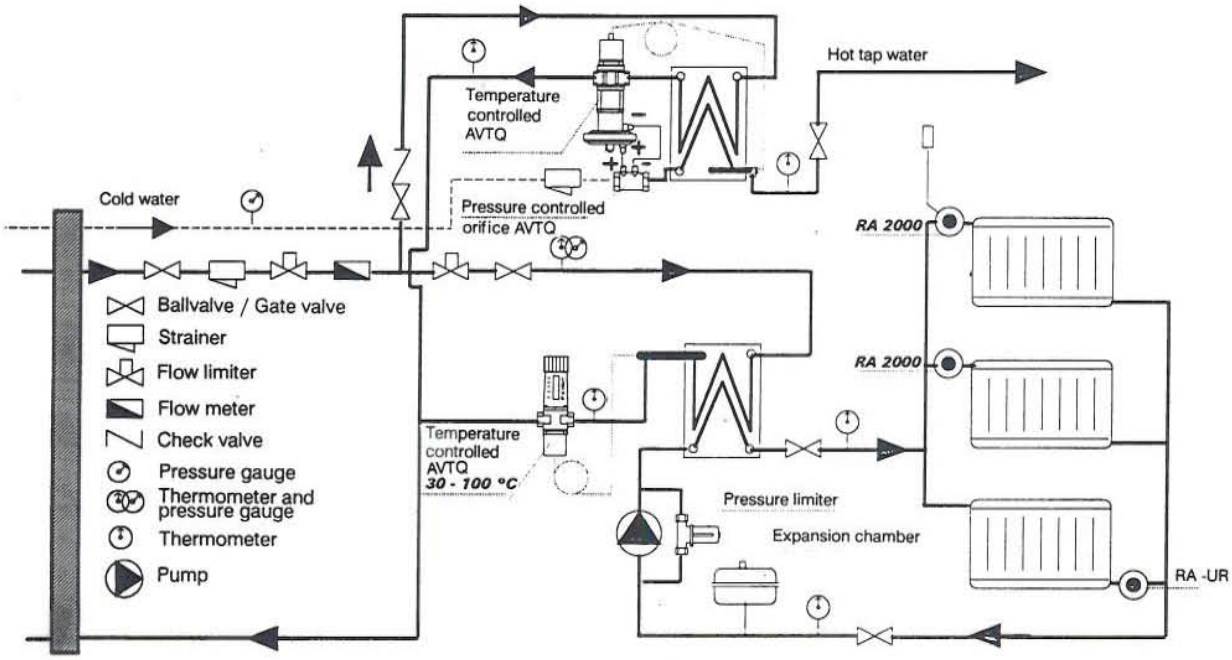

FIGURE 28: A control system for a geothermal house heating system with heat exchangers (Danfoss)

The connection can be divided into two separate parts based on different purposes i.e. the house heating part and the domestic hot tap water part. Their functions are described as follows:

The house heating connections:
A heat exchanger is installed in the house heating system to transmit geothermal energy from the geothermal fluid to the circulated water of a closed heating system. Some control equipment such as the ball/gate valve, the strainer, the flow limiter, the flow meter, the check valve, the thermometer and the pressure gauge, are installed in the geothermal supply pipe before the inlet in the heat exchanger, and have the same functions and purpose described in the last two chapters. A temperature controlled valve AVTB, introduced in Chapter 4, is fitted in the return geothermal water pipe in the heat exchanger and the sensor of the AVTB is fitted in the outlet of geothermal water. We can pre-set the AVTB, by means of Figure 17, according to the calculated required heat of the heated houses in th AVTB valve setting diagram. The function of the AVTB is to control the water temperature outlet in the heat exchanger. The valve body of the AVTB opens more during cold weather conditions which increases heat requirement. Other equipment installed is: A circulation pump for circulating the closed heating system water; a pressure limiter for the pump; a ball gate valve and a pressure gauge mounted before the pipes are connected to the radiators; some RA 2000 series radiator thermostats for maintaining the required indoor temperature; an expansion chamber for water in the closed heating system.

The domestic hot tap water connections:
Another heat exchanger is fitted in the domestic hot tap water part, in order to extract the geothermal energy and obtaining hot tap water. A pressure controlled thermostatic valve AVTQ mentioned above is typically used for this purpose. The thermostatic valve AVTQ consists of a temperature control and a control valve (an orifice). The temperature control is mounted in the primary return and connected to the orifice on the cold water pipe via impulse tubes. When the hot water is tapped, the differential pressure of cold water across the orifice allows the temperature control to open for the water flow from the primary heating system and is closed again instantaneously when the tapping stops. At the same time, the sensor of the valve is mounted in the outlet of the hot tap water in the heat exchanger to control a constant required hot tap water temperature after the temperature control is opened.

7. CONCLUSIONS

1. The different types of geothermal district heating systems are introduced and compared with conventional heating systems to show some advantages of geothermal district heating.

2. RA 2000 series radiator thermostats, used to maintain constant indoor temperature in geothermal house heating, are introduced. Some examples are given for selecting, pre-setting or adjusting the valve.

3. Other control equipment which has been used in geothermal house heating are introduced, including temperature controlled valve type AVTB, temperature and pressure controlled valve type AVTQ, differential pressure controlled valve type AVD and back pressure controlled valve type AVDA. Some examples are given so as to show how to size, set, select and apply each of the above controlled valves.

4. Different types of control systems for geothermal house heating are introduced and explained.

ACKNOWLEDGEMENTS

I hereby would like to express my gratitude to the respectable staff of Orkustofnun and other experts around Iceland who gave me very valuable guidance and advice during the geothermal training in Iceland.

Special thanks to Dr. Ingvar B. Fridleifsson director of the UNU Geothermal Training Programme in Iceland, who gave me the honour of being a UNU Fellow, and to enter the Geothermal Training Programme and who gave valuable advice and great help to my district on geothermal utilization.

Many thanks to Mr. Saethor L. Jonsson as my excellent supervisor, who gave me great quantity of knowledge and helpful advice during my final specialized study.

I also mention with gratitude: Sverrir Thorhallsson for his suggestion on my report; Einar Eliasson for his discussion and recommendation on geothermal district heating systems concerning my district's situation; Thorbjorn Karlsson and Pall Valdemarsson professors from the University of Iceland for their special lectures conducted in the university on heat exchangers and heat pumps, and Arni Gunnarsson consulting engineer for his special lectures on deep well pumps.

Also heartfelt gratitude to Ludvik S. Georgsson and Margret Westlund for their enthusiastic care and help for UNU Fellows from the beginning to the end of the training.

Finally, I express my sincere thanks to all UNU 1993 Fellows for their encouragement and help during my training in Iceland.

REFERENCES

Eliasson, E.T., Armannsson, H., Fridleifsson, I.B., Gunnarsdottir, M.J., Bjornsson, O., Thorhallsson, S., and Karlsson, T., 1990: Space and district heating. In: Dickson M.H., and Fanelli M. (Editors), Small geothermal resources, a guide to development and utilization. Rome-Italy, 101-128.

Danfoss: Data Sheets from 1990-1993 on Radiator Thermostats; Thermostatic Water Valve AVTB; Pressure controlled Thermostatic Valve Type AVTQ; Pressure controls AVD, AVDA, AVDS, AVDSA.

Karlsson, T., 1982: Geothermal district heating: The Iceland experience. UNU G.T.P., Iceland, report 4, 116 pp.